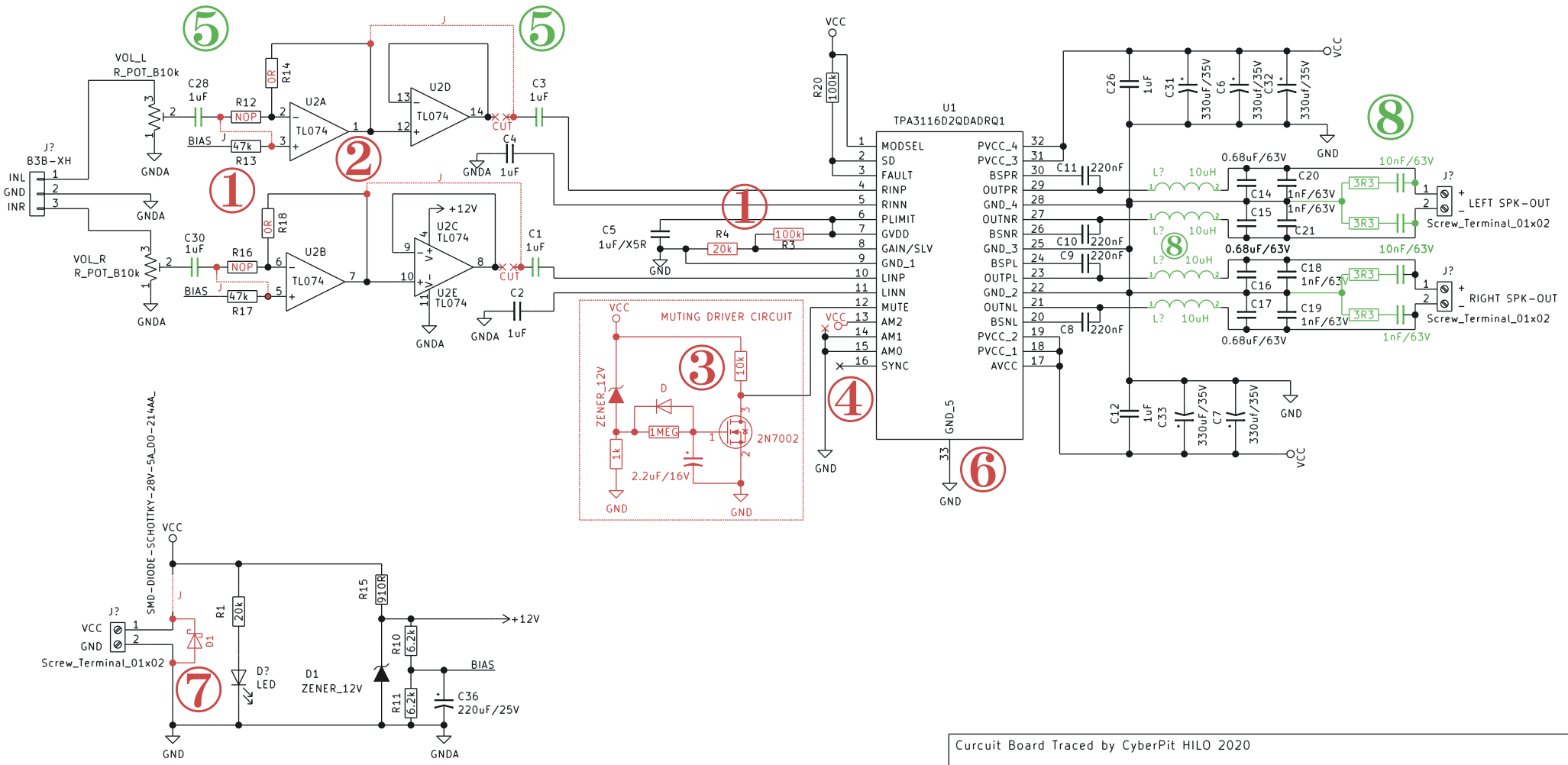

Curcuit Board Traced by CyberPit HILO 2020

Sheet: /
File: TPA3116D2_Modified_XH-M543_BTL-Amp.sch

Title: Modified JSXINGHE XH-M543 (TPA3116D2 BTL STEREO AMP)

Size: A4	Date: 2020-02-03	Rev: V9
KiCad E.D.A. kicad (5.1.4-0-10_14)		Id: 1/1